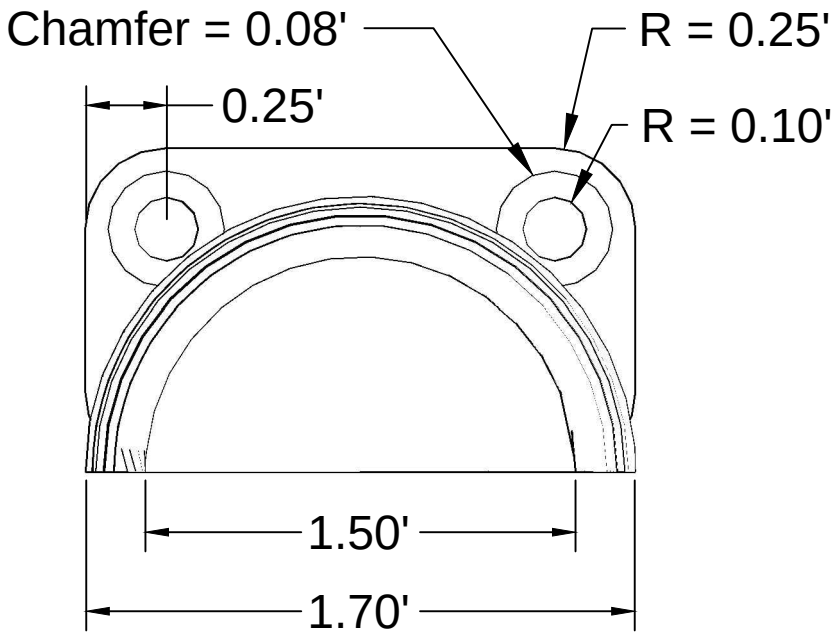
Chamfer = 0.08'
R = 0.25'
0.25'
R = 0.10'
1.50'
1.70'

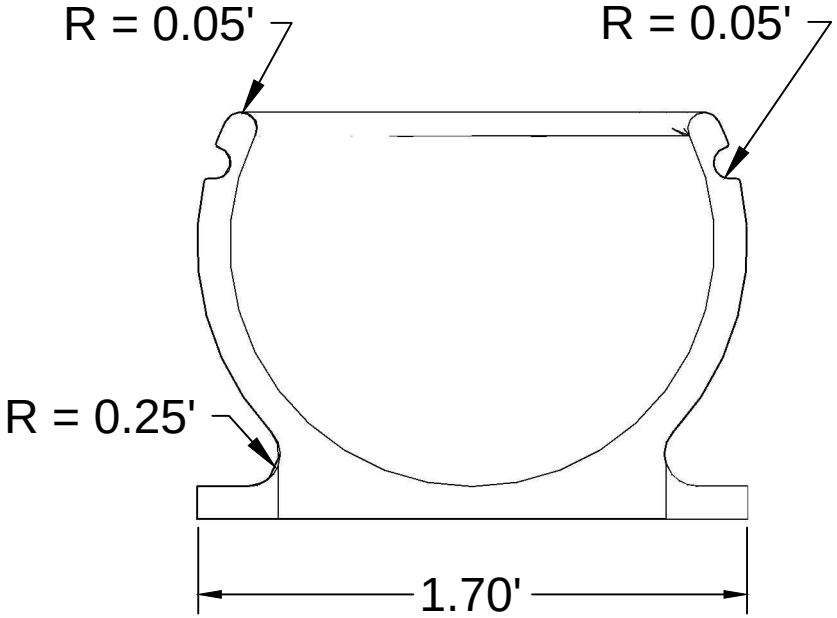
R = 0.05'
R = 0.05'
R = 0.25'
1.70'

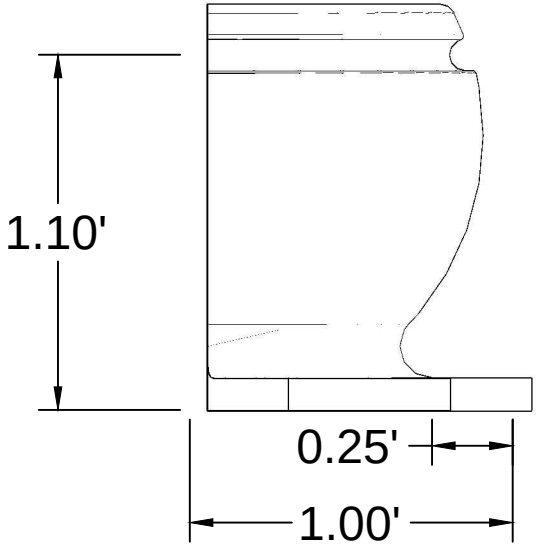
1.10'
0.25'
1.00'