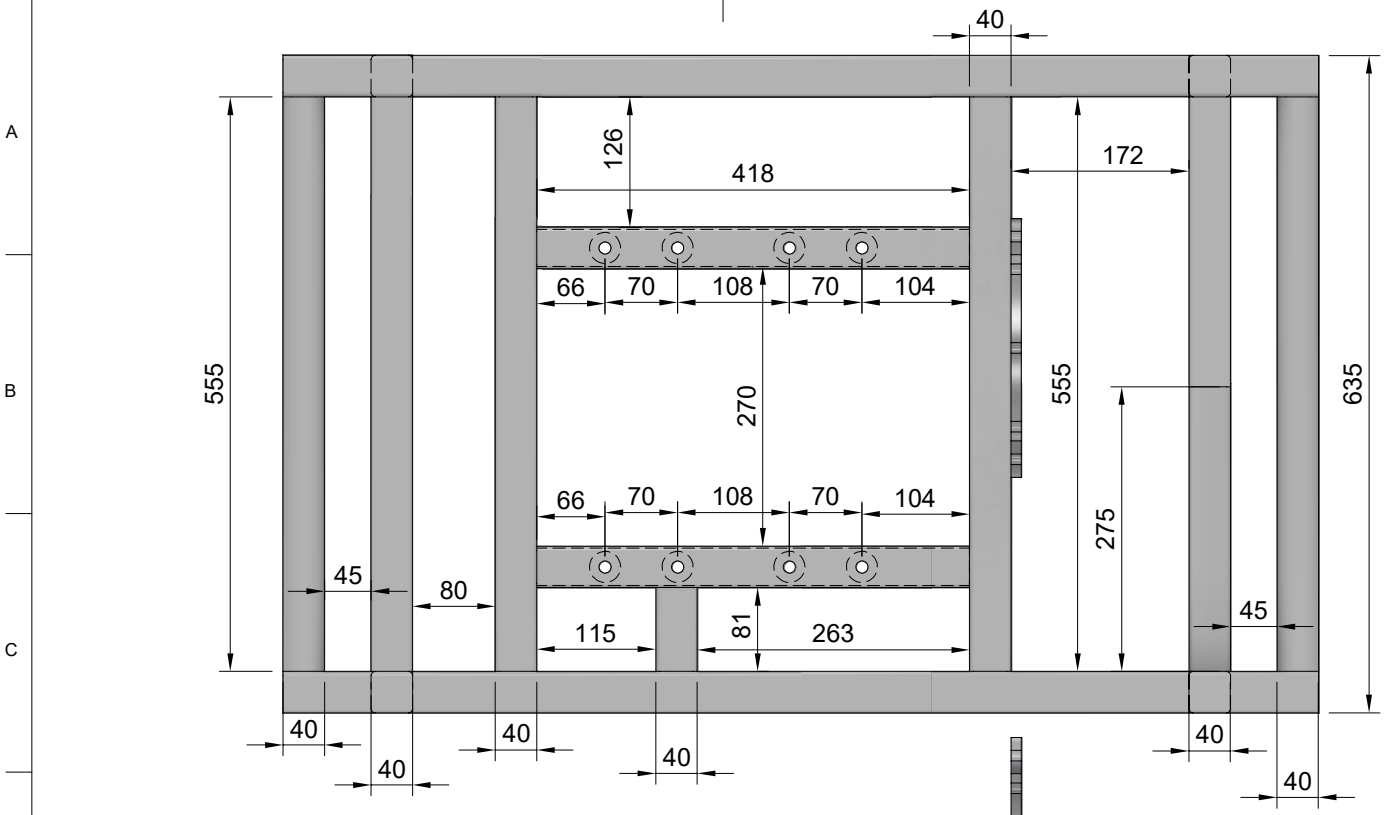

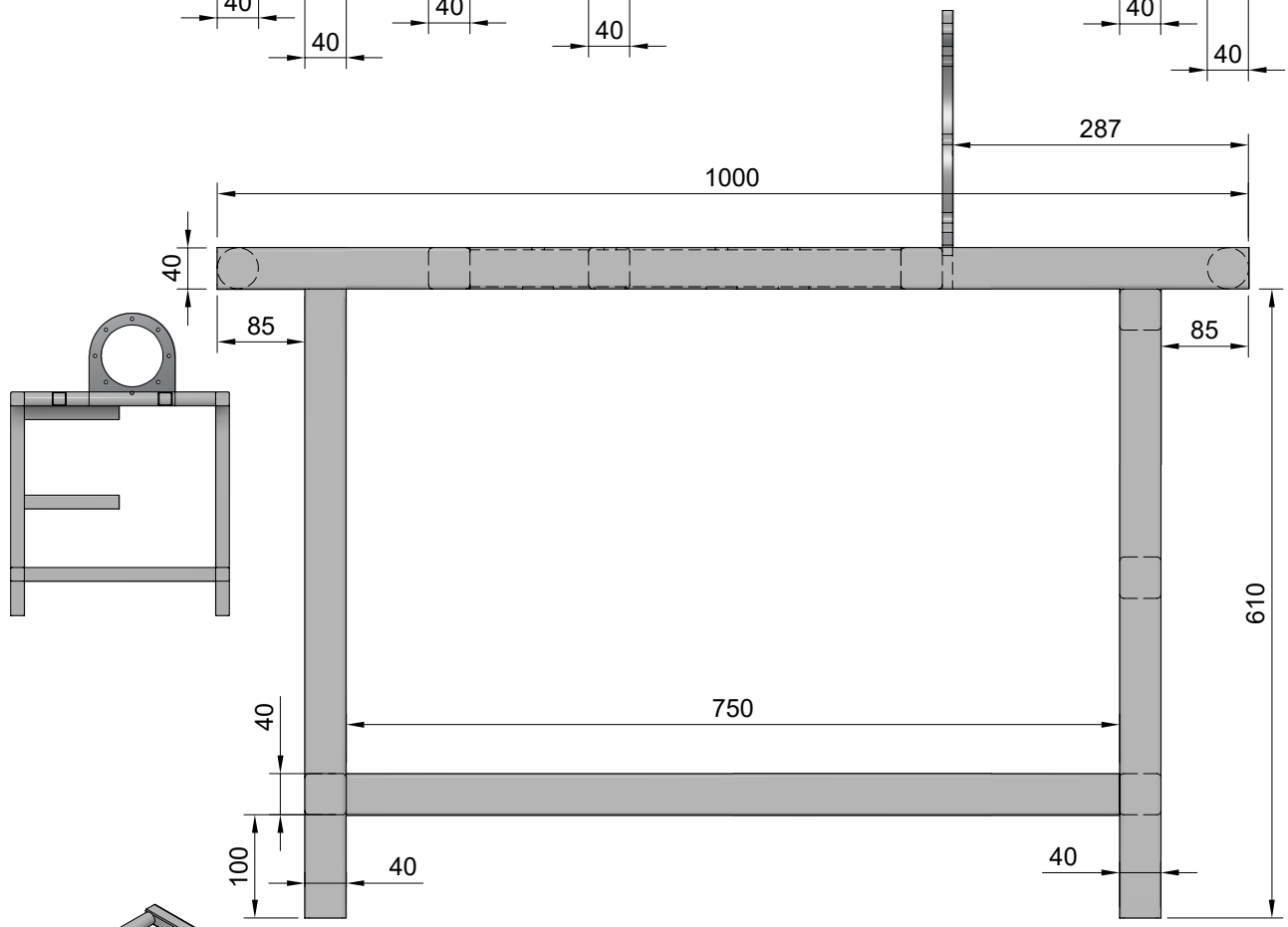

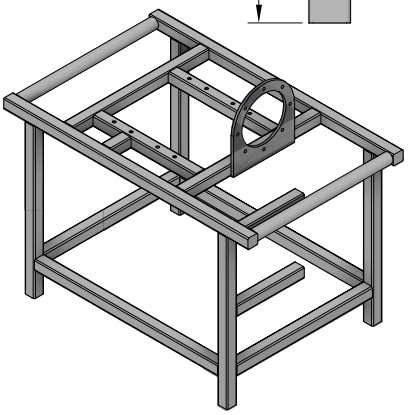

Dept.	Technical reference	Created by	Approved by
		Bohdan 1/26/2025	
		Document type	Document status
		Title	DWG No.
		Shredder by Ostriv and Eco misto	Rev. / Date of issue / Sheet 1/1